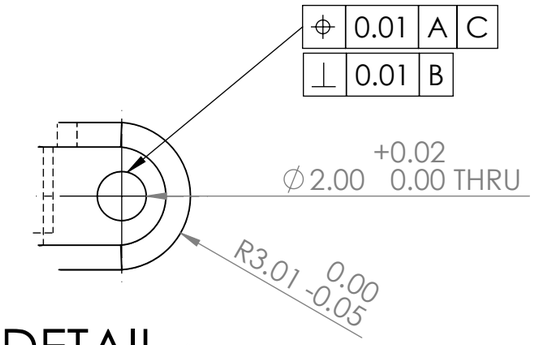

DETAIL A

SCALE 4 : 1

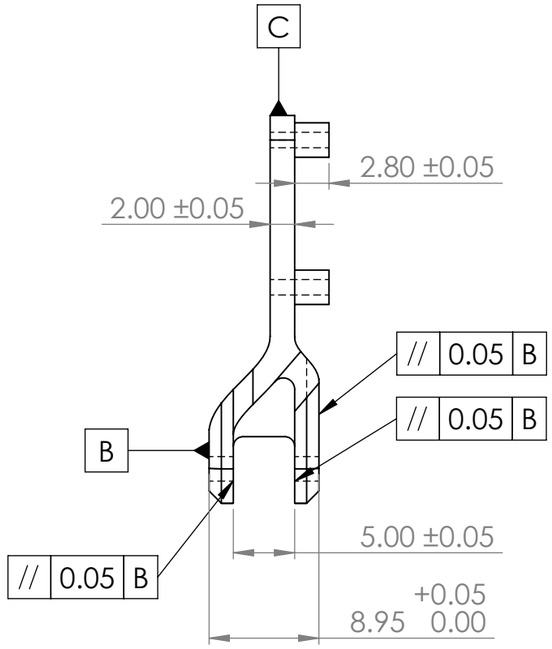

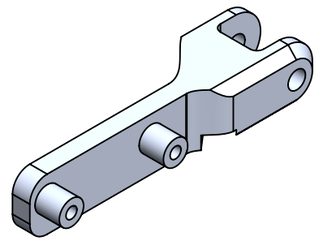

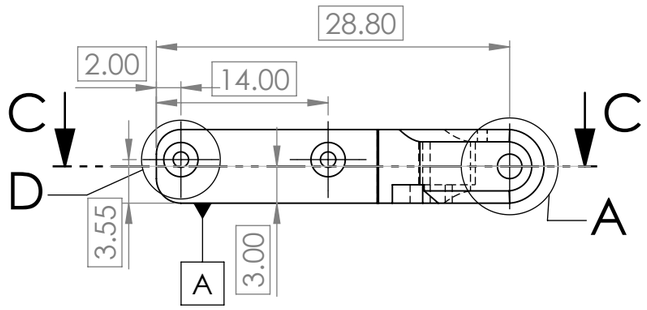

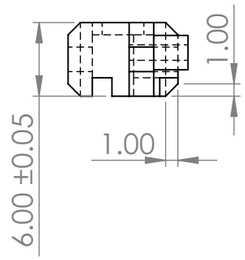

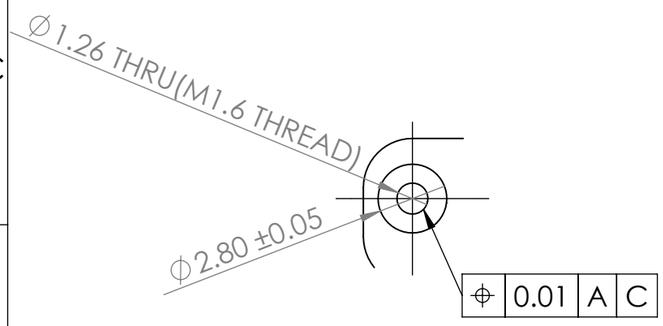

X 2

DETAIL D

SCALE 4 : 1

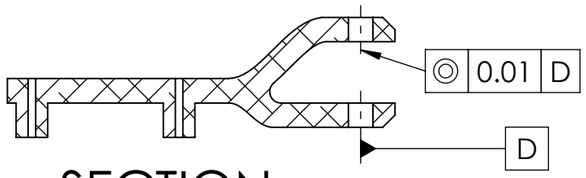

SECTION C-C

Note : Consider a general tolerance of 0.05mm in case where it is not mentioned.

Botlab Dynamics Pvt. Ltd.

TITLE: 2.3MCYH2_2				
SCALE: 2:1				
PARTICULARS		DATE	MATERIAL:	DWG NO: 01
DRAWN BY	VISHAL SHARMA	08-12-2025	ALUMINUM 6061	
CHK'D BY	ISHWAR MISHRA	08-12-2025	WEIGHT: (gm)	SHEET REVISION : 01 / SHEET 1 OF 1
APPV'D BY	TANMAY BUNKAR	08-12-2025		ALL DIMENSIONS IN MM / A3